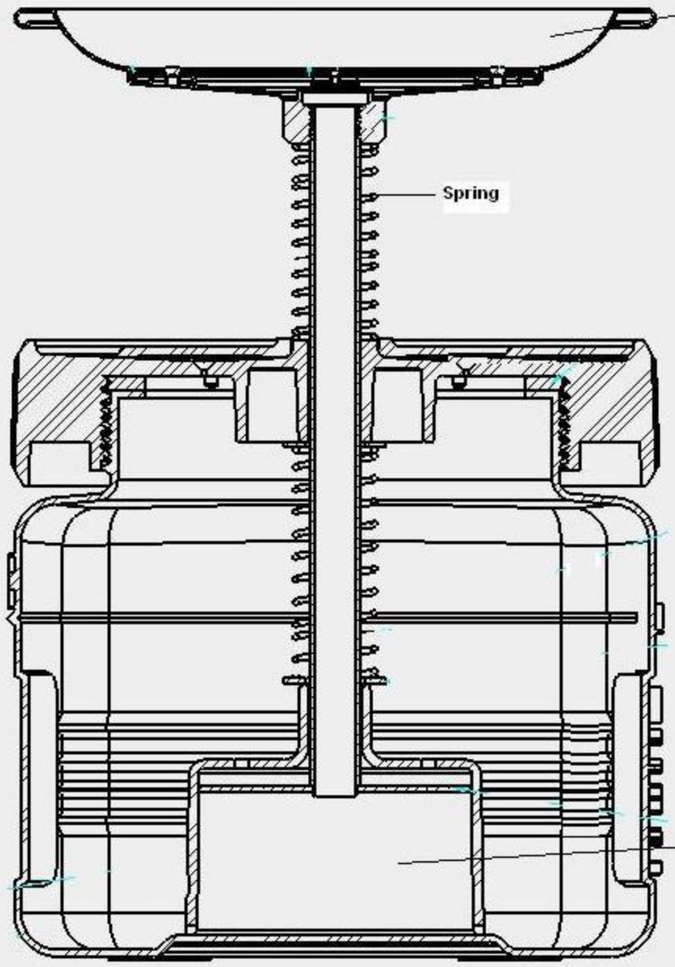

Poly Plunger Can (14018)

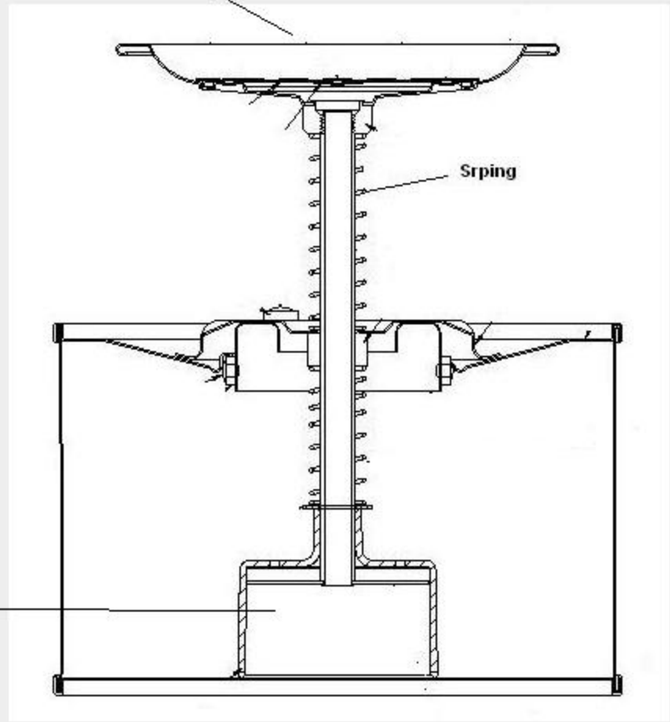

Metal Plunger Can